AMX-1101

Analog audio embedder

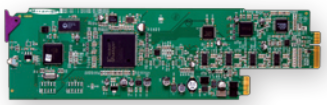

The AMX-1101 is a high-quality, high performance analog audio embedder designed to insert two analog audio stereo signals into a single SDI signal. The AMX-1101 comprises an ADC-1722 card (analog audio to AES converter) and an AMX-1121 card (2 AES Embedder). The two cards are bundled via a special connector panel that allows direct analog audio embedding without requiring any AES connections, in addition to optimize the slot usage.

The embedding process of the AMX-1101 includes an advanced signal loss detection function that provides a near seamless transfer to an internally generated black on loss of the SDI input, thus sustaining audio embedding.

Moreover, it provides automatic equalization for up to 350 meters of Belden 1694A cable at 270 Mbps and supports LTC embedding as ANC data.

The audio processing includes 24-bit analog to digital conversion, audio input presence or overload detection and individual mute and level adjustment for every channel.

KEY FEATURES AND BENEFITS

- SDI input with up to 350 m automatic cable equalization
- Auto-detects 525/625 line format
- Maintained SDI output with embedded audio, even with loss of SDI input
- Inserts 2 analog audio stereo signals
- Audio group insertion/pass-through/delete
- Selectable routing of audio pairs to groups
- Left/Right channel swappable
- Selectable audio delay (up to 6 fields)
- 24-bit analog to digital audio conversion
- 0 dBFS selectable (0 to +28 dB, by 1 dB steps)
- -96 to +12 dB of audio level adjustment (by 0.5 dB steps)
- Audio and video signal presence detection and remote reporting
- Audio overload detection and reporting
- Remote configuration and control
- Built-in audio and video test signals

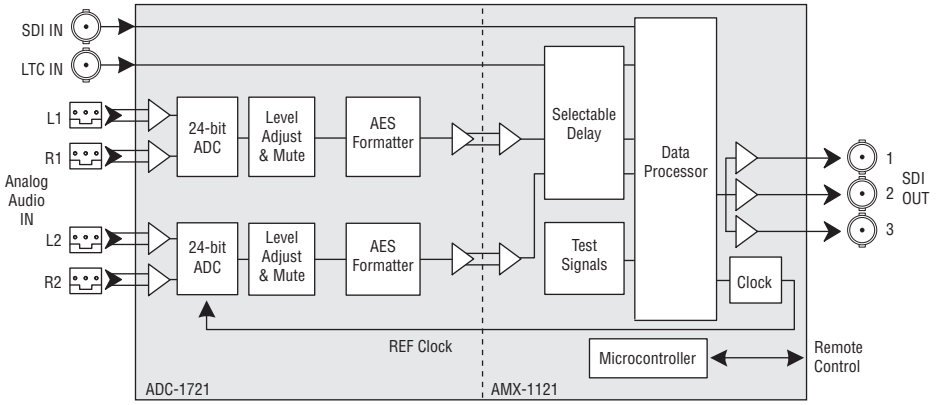

AMX-1101 Functional Block Diagram

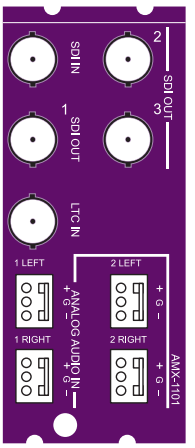

AMX-1101-DRP

TECHNICAL SPECIFICATIONS

INPUT

Video signal:	SMPTE 259M-C (270 Mbps)
	SMPTE 272M-C (embedded audio)
Cable length:	Up to 350 m of Belden 1694A
Return loss:	>15 dB 5 MHz to 270 MHz
Audio signal:	Balanced analog stereo audio
Impedance:	>12 kohm

LTC SIGNAL

Signal:	LTC per SMPTE 12M (or other similar signal)
Rate:	1/10 to 5x nominal play speed
Impedance:	>10 kohm (bridging 600 ohm)
Level:	0.5 to 5 Vp-p

OUTPUT

Video signal:	SMPTE 259M-C
	Audio embedding per SMPTE 272M-C
	LTC embedding per SMPTE 291M
Return loss:	>15 dB up to 270 MHz
Jitter:	<0.2 UI p-p (wideband)

PROCESSING PERFORMANCE

Signal path:	10-bit video/20/24-bit audio
Video delay:	10.5 µs

AUDIO PROCESSING

Delay:	2.13 ms audio insertion delay *
Audio delay:	Up to 6 video fields (one field steps)

LTC PROCESSING

Latency:	8 video lines *
LTC delay:	None or tracking of audio delay
Test signals:	Video - 75 % color bars with 100 % white
	Audio - 1 kHz tone (R steady, L pulsed)

ELECTRICAL

Power:	10 W

* Combined embedding and extraction, applicable to combination of AMX-1101 and ADX-1101

ORDERING INFORMATION

Densité 2 frame

AMX-1101-BDL	Analog audio embedder (comprises one AMX-1121 card and one ADC-1722 card)
AMX-1101-DRP	Double rear connector panel

Densité 3 frame

AMX-1101-BDL-3RU	Analog audio embedder (comprises one AMX-1121 card and one ADC-1722 card) (including 3RU adaptor)
AMX-1101-DRP-3RU	Double rear connector panel (including 3RU adaptor)

Remote control iControl, iControl Solo, RCP-200