AVMFlex-SA Series

1U CVBS/SDI Audio/Video Monitor

Document P/N **821624** Rev-**A**

Two Analog Audio Inputs on XLRs, CVBS Video Input/Loop on BNCs, SDI Input and Re-Clocked Output on BNCs, Analog Audio Output (De-embedded from SDI) on XLRs, Analog Audio Output of Selected Source on two XLRs, Two 10-Segment Bargraph Level Meters, SDI Lock Indication LED, and Video Display Module Mounted on a Flexible Gooseneck

User Manual

CONTENTS

Title and Contents 1

Introduction and Important Safety Instructions 2

Section 1: General Features and Specifications 3

Description and Features 4

Applications and Specifications 5

Model Configurations and Naming Convention 6

VPOD LCD Display Specifications 6

Section 2: Operation 7

Front Panel Features 8

Rear Panel Features 12

VPOD-5W On-Screen Display Controls 16

Audio Amplifier and Speaker Configuration 18

Balance Control Characteristics 18

VPOD Gooseneck Length Adjustment 19

Section 3: Technical Information 21

General Technical Observations 22

Tally Control Connector Wiring 23

Level Meter Specifications 25

Level Meter Settings 25

AVMFlex-SA Series Interconnect Block Diagram 26

© 2005 PANORAMAdtv ALL rights reserved

Important Safety Instructions

1) Read these instructions.
2) Keep these instructions.
3) Heed all warnings.
4) Follow all instructions.
5) Do not use this apparatus near water.
6) Clean only with dry cloth.
7) Do not block any ventilation openings. Install in accordance with the manufacturer's instructions.
8) Do not install near any heat source such as radiators, heat registers, stoves, or other apparatus (including amplifiers) that produce heat.
9) Do not defeat the safety purpose of the polarized or grounding-type plug. A polarized plug has two blades with one wider than the other. A grounding type plug has two blades and a third grounding prong. The wide blade or the third prong are provided for your safety. If the provided plug does not fit into your outlet, consult an electrician for replacement of the obsolete outlet.
10) Protect the power cord from being walked on or pinched, particularly at plugs convenience receptacles and the point where they exit from the apparatus.
11) Only use attachments/accessories specified by the manufacturer.
12) Use only with the cart stand, tripod, bracket, or table specified by the manufacturer, or sold with the apparatus. When a cart is used, use caution when moving the cart/apparatus combination to avoid injury from tip-over.
13) Unplug this apparatus during lightning storms or when unused for long periods of time.
14) Refer all servicing to qualified service personnel. Servicing is required when the apparatus has been damaged in any way, such as when power-supply cord or plug is damaged, liquid has been spilled or objects have fallen into the apparatus, the apparatus has been exposed to rain or moisture, does not operate normally, or has been dropped.
15) Do not expose this apparatus to rain or moisture.
16) The apparatus shall be connected to a mains socket outlet with a protective earthing connection.

CAUTION!

In products featuring an audio amplifier and speakers, the surface at the side of the unit, where the audio amplifier heat sink is internally attached, may get very hot after extended operation. When operating the unit excercise caution when touching this surface and ensure that external materials which may be adversely affected by heat are not in contact with it. There is a Hot Surface label (see diagram) attached to the aforementioned surface of the product.

Introduction

Congratulations on your selection of a PANORAMAdtv product. We are confident it represents the best performance and value available, and we guarantee your satisfaction with it.

If you have questions or comments you may contact us at:

Wohler Technologies, Inc.
31055 Huntwood Avenue
Hayward, CA 94544
Phone: **(510) 870-0810** Fax: **(510) 870-0811**
US Toll-Free: **1-888-596-4537**
www.panoramadtv.com sales@panoramadtv.com

© 2007 **Wohler Technologies, Inc.** ALL rights reserved

Section 1

General Features and Specifications

Description

Features

Applications

AVMFlex-SA General Specifications

Model Configurations and Naming Convention

VPOD LCD Video Display Specifications

Installation

Unpacking

Unpack the **AVMFlex-SA Series** unit from the shipping container and inspect all articles for shipping damage. If you find any damage, notify the shipping carrier immediately for claims adjustments. Compare the shipping box contents to the packing slip. Contact a PANORAMAdtv sales representative if there are any unexplained shortages.

Heat Dissipation

Heat dissipated by the speaker amps is conducted directly to the left side of the chassis; no special considerations for cooling are necessary as long as the ambient temperature inside the rack area does not exceed approximately 40°C (104°F).

Sympathetic Vibration

Sympathetic vibration from other equipment (cables, etc.,) in the rack may be serious enough to interfere with the unit's sound quality out in the listening area. The use of thin card stock and/or felt or foam weather-stripping type materials between adjacent vibrating surfaces, or tying up loose cables, etc., may be required to stop vibrations external to the unit.

Audio Connections

Connection of the audio feeds is straightforward. Please refer to the system interconnect block diagrams on page **26** for clarification of the general signal paths into and out of the **AVMFlex-SA Series** units.

Rack Mounting

The **AVMFlex-SA Series** unit rack mounts in a standard EIA-310-D specification 19"/483mm rack and needs 1RU of space. Allow sufficient space at the unit rear for connector and cable clearance (approximately 4"/102 mm). The **AVMFlex-SA Series** unit rack mounts from the front panel support rails. Rear support is not required.

Cable Recommendation

Recommended cable type for **analog video** signals is: **Belden 8281, Belden 1694A,** or equivalent.
Recommended cable type for **analog audio** signals is: **Belden 9451** or equivalent.

© 2005 PANORAMAdtv ALL rights reserved

AVMFlex-SA Series

1U Audio/Video Monitor

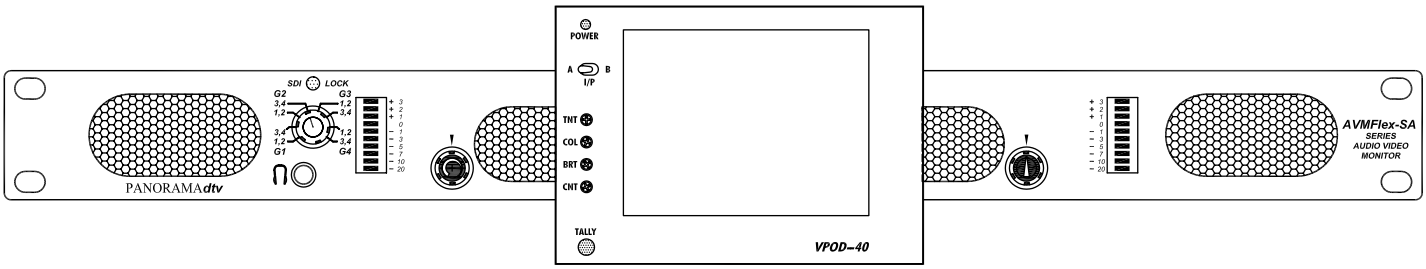

AVMFlex-SA/4 Front Panel

Description

The **AVMFlex-SA Series** of audio/video monitors provides the capability to monitor **CVBS** (composite analog) or **SDI** (serial digital interface) video on an LCD display with full-fidelity stereo audio monitoring in a single rack space (1U). The **AVMFlex-SA Series** models feature a **VPOD** LCD video display module mounted to the front panel via a flexible gooseneck allowing for extensive control of the viewing angle.

All models in the **AVMFlex-SA Series** contain four high performance speakers driven by three power amplifiers: two amplifier/driver combinations handle midrange and high frequency information in stereo, while the third center channel reproduces information below the 500 Hz crossover point. Output limiter circuits are incorporated to protect the speakers.

The **VPOD LCD Video Display** is available in 4", 5.6", 5.8" (16:9), 6.8", and 7" (16:9) LCD sizes and features controls for color, tint/hue (NTSC only), contrast, and brightness. The display also has a power LED of its own and a bi-color (red/green) tally indication LED.

All **AVMFlex-SA Series** models come equipped with two 10-segment tri-color (red/amber/green) LED bargraph display level meters, separate volume and balance controls, a power indication LED, headphone output, and an SDI lock status LED display, which visually shows the lock status of SDI signals selected for monitoring. Extensive magnetic shielding allows placement immediately adjacent to video monitors with no color impurities.

The **AVMFlex-SA Series** rear panel is configured with one **CVBS** video input with loop-through output on BNC connectors, one **SDI** video input and re-clocked output on BNC connectors, one **CVBS** video output de-embedded from the **SDI** input on a BNC connector, two balanced (stereo) **analog** audio inputs on XLR connectors, two balanced **analog** audio outputs de-embedded from the **SDI** audio input on XLR connectors, and two **analog** outputs of the selected audio source on two male XLR connectors. The audio and video inputs are relayed so that selecting either the **CVBS** or **SDI** *video* source on the **VPOD** video display module will also select the associated **CVBS** or **SDI** *audio* source. A DB-25 connector is also provided for tally connections.

Features

- Bi-amp sum amplification through high/mid and woofer speakers
- Relatively large LCD video display in a space-saving 1U rack size
- Choice of 4", 5.6", 5.8" (16:9), 6.8", or 7" (16:9) LCD video display sizes
- Flexible gooseneck mounting of video display allows adjustable viewing angle in all directions
- CVBS video inputs and loop-through output on BNC connectors with selectable termination
- SDI video input and re-clocked output on BNC connectors with selectable gain calibration
- SDI lock status LED
- VPOD LCD video display modules feature:
  - *Adjustment for color, tint/hue (NTSC only), contrast, and brightness
  - *Dual color (red/green) talley indication LED
  - *Power indication LED
- NTSC/PAL format auto-sensing
- Two analog audio stereo inputs on balanced female XLR connectors
- Two analog audio outputs de-embedded from the SDI input on balanced female XLR connectors
- Two balanced analog ouputs of the selected audio source on two female XLR connectors
- Two 10-segment tri-color (green/amber/red) LED bargraph display audio level meters
- DB-25 connector on rear panel provided for tally connections
- 98 dB SPL at two feet
- Excellent high frequency response for positive detection of background whine and noise
- Thorough magnetic shielding for placement next to video monitors
- Separate volume and balance controls
- Headphone output

© 2005 PANORAMAdtv ALL rights reserved

Applications

The **AVMFlex-SA Series** is ideally suited for use in VTR bays, mobile production vehicles, teleconferencing installations, multimedia systems, satellite link and cable TV facilities, and on-air radio studios. Designed and manufactured in the U.S., the **AVMFlex-SA Series** is backed by a strong warranty and a satisfaction guaranteed return policy.

AVMFlex-SA General Specifications

Audio Inputs:	**Analog:** x2 XLR (female, 3-pin) **SDI:** x1 BNC (embedded with video)
Audio Input Impedance:	**Analog:** >40k Ω, balanced **SDI:** 75 Ω, unbalanced
Audio Outputs:	**Analog Output of Selected:** x2 XLR-M **Analog Output from SDI:** x2 XLR-M
Peak Acoustic Output @2 feet:	98dB SPL
Frequency Response (1/6 Octave):	80 Hz to 20 Hz (+/- 5 dB) (-10 dB @ 50 Hz, 22 kHz)
Power Output:	RMS each side = 5W, 7W peak RMS dual woofer = 11W, 16W peak
Electrical Distortion:	<0.15% @ any level below input threshold
Hum and Noise:	Better than -68 dB below full output
SDI Input Characteristics:	75 Ohm (BNC), AC coupled, 15 dB minimum return loss, 10-270 MHz
Receiver type:	Auto equalizing with clock regeneration
Sensitivity performance:	Tolerates cable loss of at least 30 dB @ 135 MHz
Input formats:	Component, either 525 or 625 lines w/ 48 KHz audio
Audio sampling rate:	48 KHz
SDI output type:	Fully regenerated copy of SDI input signal (equalized and regenerated, scrambled NRZI)
SDI output:	400 - 700 ps
SDI output level:	750 - 850 mv
Max. output of analog out:	+24 dBv (0 dBv = 0.775 vRMS)
THD (full output):	Less than 0.008%
D to A gain calibration, (dB = dBFS):	+8 = -20, +4 = -20, +6 = -9, 0 = -18 (DIP switch selectable)
SDI Lock Indication:	Red LED, Off = not locked Red = locked

Video Input Format:	CVBS (Composite Analog) video SDI video (with audio embedded)
Video Input Connectors:	**CVBS:** x1 BNC **SDI:** x1 BNC
Video Input Termination:	**CVBS:** 75 Ω (Ohm), selectable **SDI:** 75 Ω (Ohm)
Video Output Connectors:	**CVBS:** x1 BNC (passive loop-thru) x1 BNC (from SDI Input) **SDI:** x1 re-clocked (regen.) output
Video Display Modes:	NTSC/PAL autosensing
Video Display Type:	Active Matrix TFT-LCD
Video Picture Controls:	Brightness, contrast, color, and tint (NTSC only)
Video Color Configuration:	RGB delta
Magnetic Shielding:	<1 gauss any adjacent surface
Power Supply:	Internal 100 to 240 VAC, 50-60 Hz
Dimension (h x w x d) (chassis only):	1.75 x 19 x 10 inches 44.5x 483 x 254 mm
Weight (chassis only):	9.5 lbs. (4.3 kg) w/ 6.8 VPOD

Audio Response

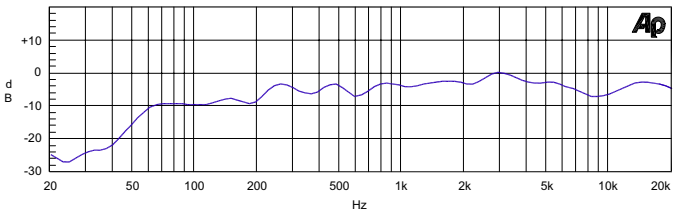

Typical 1/6 Octave Audio Response Curve

0 dbu ref. 0.775V RMS. Features and specifications subject to improvement without notice.

© 2005 PANORAMAdtv ALL rights reserved

Model Configurations and Naming Convention

The only difference between the various models of **AVMFlex-SA Series** is the size of the LCD video display used in the specified **VPOD** LCD display module.

Model	VPOD Model	Display Size
AVMFlex4-SA	VPOD4	4"
AVMFlex5-SA	VPOD5	5.6"
AVMFlex5W-SA	VPOD5W	5.8" (16 x 9)
AVMFlex6-SA	VPOD6	6.8"
AVMFlex7W-SA	VPOD7W	7" (16 x 9)

VPOD LCD Video Display Specifications

VPOD Video Specs:	VPOD4	VPOD5	VPOD5W	VPOD6	VPOD7W
Screen Size (diagonal inches):	4"	5.6"	5.8"	6.8"	7"
Active Area (H x V, mm):	82.1 x 61.8	113.3 x 84.7	127.2 x 71.84	138.2 x 103.4	154.1 x 88.6
LCD Aspect Ratio:	4:3	4:3	16:9	4:3	16:9
Resolution (dots x lines):	480 x 234	960 x 234	1200 x 234	1152 x 234	1440 x 234
Dot Pitch (mm):	0.171 x 0.264	0.118 x 0.362	0.106 x 0.307	0.120 x 0.442	0.107 x 0.370
Contrast Ratio:	150 : 1	150 : 1	150 : 1	150 : 1	150 : 1
Brightness (NITs):	250	300	400	300	400
Viewing Angle (top/bottom/left/right):	10°/ 30°/ 45°/ 45°	10°/ 30°/ 45°/ 45°	30°/ 60°/ 60°/ 60°	10°/ 30°/ 45°/ 45°	60°/ 30°/ 60°/ 60°
Weight (VPOD module w/mount):	0.9 lbs.	1 lbs.	1.25 lbs.	1.3 lbs.	1.4 lbs.
Power Consumption (Watts, VPOD):	3 W	7 W	7W	8W	10W
Height x Width x Depth (inches):	**3.45** x **4.92** x **1.1**	**4.15** x **6.4** x **1.22**	**4.23** x **6.4** x **1.22**	**5.18** x **7.5** x **1.22**	**4.93** x **7.4** x **1.22**

© 2005 PANORAMAdtv ALL rights reserved

Section 2

Operation

Front Panel Features

Rear Panel Features

VPOD-5W On-Screen Display Controls

Audio Amplifier and Speaker Configuration

Balance Control Characteristics

VPOD Gooseneck Length adjustment

© 2005 PANORAMAdtv ALL rights reserved

Front Panel Features

Please refer to **Figure-2a** on the facing page to familiarize yourself with the front panel features of the **AVMFlex-SA Series** unit. The following sections describe these functions and are referenced, by number, to **Figure-2a**.

1 Speakers

The internal speaker system is comprised of two mid-range tweeter speakers (left and right) and two woofer speakers (left and right). The two mid-range speakers reproduce only the mid and high frequencies, while the two woofer speakers *monaurally* reproduce the low frequencies. See page **18** for more information about the audio amp and speaker configuration.

2 Headphone Output Jack

This jack accepts a standard 1/4" phone type stereo plug. Select the headphone audio sources as you would for the internal speakers. When you plug in headphones, the speakers will *mute*.

3 SDI Group Select Switch

This 8-position rotary switch is used to select the **SDI Group** (**G1**, **G2**, **G3**, or **G4**) and **SDI Subgroups** (**1, 2** or **3, 4**) for the **SDI** source. The **SDI** source is selected using the **A/B Select switch** (**Item 4**, page **10**) on the front of the **VPOD** LCD display pod.

4 Audio Level Meters

Audio levels are visually displayed via these two 10-segment, tri-color (RED, AMBER, GREEN) LED bargraph display level meters. The bargraph on the left indicates left channel audio levels of the of the selected source, while the bargraph on the right indicates right channel audio levels. These meters are able to display signal levels using either **PPM** or **VU** standards as selected via a DIP switch module accessible by removing the top cover of the unit. See page **25** for specifications and settings of these meters.

5 Volume Control

This controls the loudness of the audio reproduced by the internal speakers or connected headphone. Clock-wise rotation of this control increases the loudness of the monitored audio in both channels (left and right).

6 VPOD LCD Video Display Module

Video signals entering the **AVMFlex-SA Series** unit are monitored through the **VPOD** LCD video display. The **VPOD** module is attached to the front panel by a length of flexible gooseneck tubing allowing angle viewing adjustment in all directions. One of five sizes of LCD display screens may be specified, including **4**", **5.6**", **5.8**" (16:9), **6.8**", and **7**" (16:9) LCD display sizes.

See page **10** for complete information on the use and control of the **VPOD** LCD video display module.

7 Balance Control

This adjusts the volume balance between the left and right speakers. See page **18** for a description of the **AVMFlex-SA** balance control characteristics.

© 2005 PANORAMAdtv ALL rights reserved

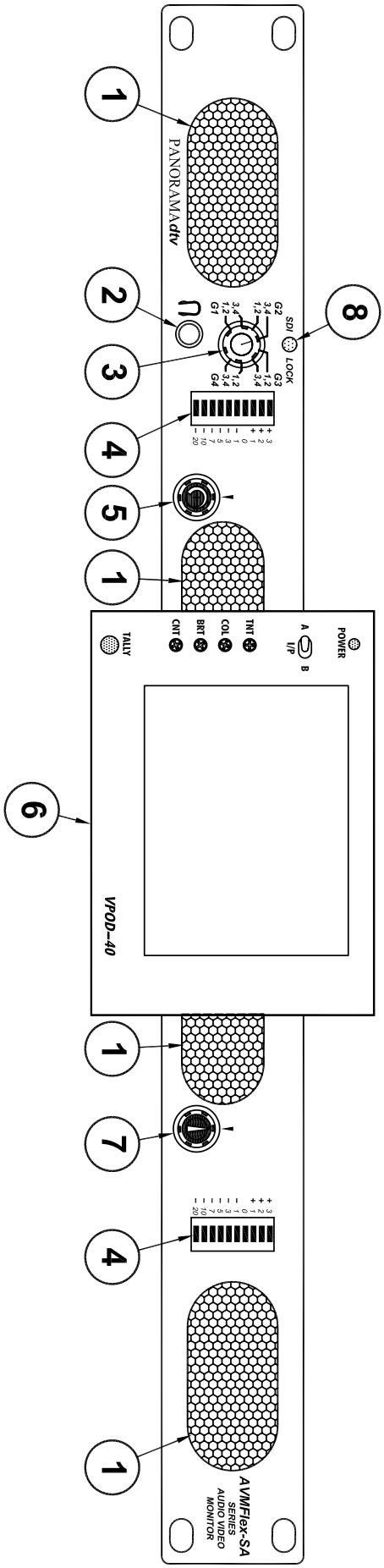

Figure-2a: Front Panel Features

© 2005 PANORAMAdtv ALL rights reserved

Front Panel Features

Please refer to **Figure-2b** on the facing page to familiarize yourself with the front panel features of the **VPOD** LCD display modules that can be specified for the **AVMFlex-SA Series** units. The following sections describe these features and are referenced, by number, to **Figure-2b**. The **AVMFlex-SA** 1U front panel, to which these displays are installed, is described and illustrated on pages **8** and **9**.

VPOD - LCD Video Display Modules

Each **VPOD** LCD video display module houses the **LCD Video Display Screen**, **Display Controls**, **A/B Input Select Switch**, **Tally Indication LED**, and **Power Indication LED**. Each **VPOD** module is attached to the **AVMFlex-SA** front panel by a length of flexible gooseneck tubing. **AVMFlex-SA Series** units are manufactured with a **VPOD** module permanently attached to the front panel. Five sizes of LCD display screens are available for the **AVMFlex-SA Series**; **4**", **5.6**", **5.8**" (16:9), **6.8**", and **7**" (16:9).

The **VPOD** module may be adjusted for viewing angle independant of the fixed position of the main chassis. There is about a +/- 60 degree field of movement of the **VPOD** module from the vertical *and* horizontal plane of the front panel. When adjusting the angle of the video screen, grasp the **VPOD** module at the right/left or top/bottom sides. Care should be taken *not* to touch the LCD video screen itself with the fingers or other objects.

CAUTION: Do NOT rotate (twist) the VPOD module around the gooseneck axis; the torque may damage the gooseneck and/or internal wiring. Also, avoid touching the LCD video screen itself with the fingers or other objects.

NOTE: The **5.8" VPOD** (**VPOD5W**), unlike the other **VPOD** models, features ***on-screen*** controls. See page **16** for descriptions of these controls and their use.

1 Tally Indication LED

This tri-color LED can glow RED, GREEN, or YELLOW to indicate tally status associated with the video signal displayed. Refer to page **23** for tally connection details.

2 Display Controls

The displayed video image for each **VPOD** LCD display module may be separately adjusted using these four image controls:

- **TNT** = **Tint**; adjust for desired image color hue (NTSC only).
- **COL** = **Color** Saturation; adjust for desired amount of image color saturation.
- **BRT** = **Brightness**; adjust for desired screen brightness.
- **CNT** = **Contrast**; adjust for desired image scene, dark-to-bright contrast.

NOTE: The **5.8" VPOD** (**VPOD5W**) display module instead uses *on-screen* controls as described in **Item 6**.

3 LCD Video Display

Selected video sources are displayed here. Screen image parameters are adjustable by four manual controls (Item **2**). See page **6** for LCD display specifications.

4 A/B Input Select Switch (CVBS or SDI)

This switch selects between the **CVBS** video input (and **Analog** audio input) and **SDI** video input (**Item E**, page **12**) sources. The audio sources are relayed to the video selection. The **A/B Input Select Switch** selects the video and audio source signals according to the following switch positions:

- **Position "A"**: **SDI** video input with embedded audio (**Item E**, page **12**).
- **Position "B"**: **CVBS** video input (Item **G**, page **12**) and **Balanced Analog Audio Input** (**Item J**, page **14**).

5 Power Indication LED

This LED glows GREEN to indicate the unit is connected to mains power and an operation voltage is present.

6 VPOD5W On-Screen Display Controls (AVMFlex-SA/5W Only)

Display controls for the **5.8" VPOD** (**VPOD5W**) are set via these three buttons. Parameters are manipulated as described on page **16**.

© 2005 PANORAMAdtv ALL rights reserved

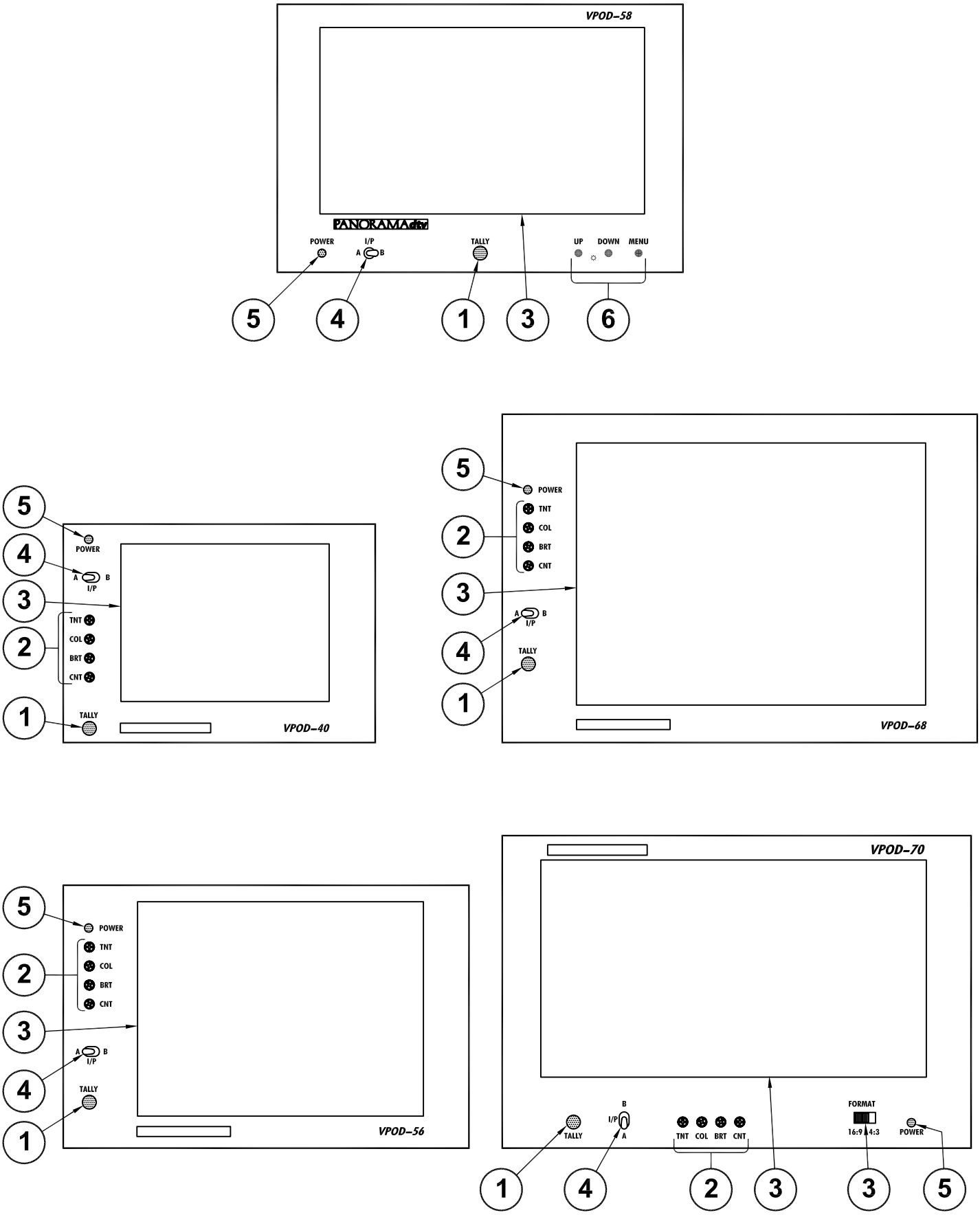

Figure-2b: Front Panel Features

© 2005 PANORAMAdtv ALL rights reserved

Rear Panel Features

Please refer to **Figure-2c** on the facing page to familiarize yourself with the rear panel features of the **AVMFlex-SA Series** units. The following sections describe these features and are referenced, by letter, to **Figure-2c**.

A Power Connector

Attach the supplied standard IEC-320 power cord between this connector and mains power (100 - 250VAC, 50/60 Hz).

B RS232 Connector

This connector is used for uploading revision data into the 910935 Audio/Video demux PCB.

C Tally Connector

This 25 pin sub-miniature female "D" connector (**TALLY**) allows you to tally the **Tally Indication LED** (**Item 1**, page **10**). Connection details are described on page **23**.

D SDI Digital Gain Calibration DIP Switch

SDI input **Digital Gain Calibration**, the analog level which corresponds to a given digital input value, is settable via this 2-position DIP switch module. The factory setting is +4 dB (analog) = -20 dBFS (digital). See the silk-screened chart on the rear panel or the diagram below for settings.

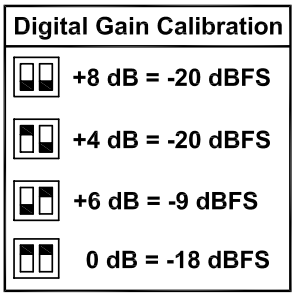

E SDI Input and Output Connectors

The **SDI IN** female BNC connector is meant to receive standard audio/video embedded **SDI** signals and is configured for an unbalanced 75 Ω connection. Use the **SDI Group Select Switch** (**Item 3**, page **8**) to choose the **SDI Group** and **Subgroups** to monitor. To monitor this input, the **A/B Select Switch** (**Item 4**, page **10**) on the **VPOD** module must be set to **A**.

The **SDI OUT** female BNC connector outputs a reclocked (regenerated) copy of the signal entering the **SDI IN** input connector and is configured for an unbalanced 75 Ω connection. This output functions regardless of other selection settings. This feature enables output of the re-clocked **SDI** signal independant of the units other monitoring functions (as long as a valid **SDI** source is present at the **SDI IN** input connector).

F CVBS Video Ouput (From SDI Input)

The **SDI CVBS OUT** female BNC connector outputs **CVBS** (composite analog) video signals de-embedded from the **SDI** bitstream entering the **SDI IN** input connector (**Item E**).

This output functions regardless of other selection settings. This feature enables de-embedding of the **SDI** signal to **CVBS** independant of the units other monitoring functions (as long as a valid **SDI** source is present at the **SDI IN** input connector).

G CVBS Video Input and Loop-Through Connectors

The **CVBS IN** female BNC connector accepts standard **CVBS** (composite analog) video signals and is configured for 75 Ω impedance connections. To monitor this input, the **A/B Select Switch** (**Item 4**, page **10**) on the **VPOD** module must be set to **B**. Note that the **Balanced Analog Audio Input Connectors** (**Item J**, page **14**) are relayed to the **CVBS** input selection, and so are automatically selected for *audio* monitoring when the **CVBS** video input source is selected for *video* monitoring.

The **CVBS LOOP** female BNC connector provides passive signal-through connections from the **CVBS IN** connector to down-stream equipment. See **Item H** for information about setting the termination for these connectors. Note that these outputs function even if power to the **AVMFlex-SA** unit is turned **OFF**.

H CVBS Input Temination Switch

The **LIFT/TERM** slide switch is used to set the termination for the **CVBS** input. If the **CVBS LOOP** connector (**Item G**) is connected to downstream equipment, *un-terminate* by setting the switch to the **DOWN** position (**LIFT**). If *no* downstream equipment is connected, *terminate* by setting the switch to the **UP** position (**TERM**).

(Continued)

© 2005 PANORAMAdtv ALL rights reserved

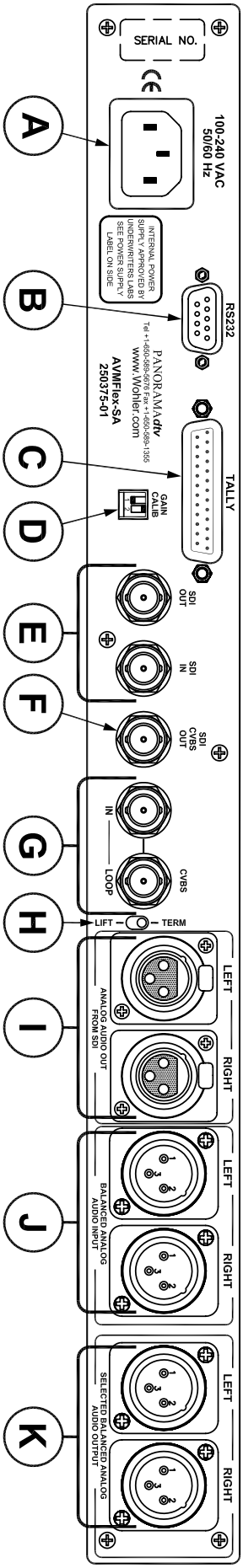

Figure-2c: Rear Panel Features

© 2005 PANORAMAdtv ALL rights reserved

Rear Panel Features

(Continued)

I Analog Audio Output (From SDI Input) Connectors (LEFT and RIGHT)

The **ANALOG AUDIO OUT FROM SDI** 3-pin male XLR connectors (**LEFT** and **RIGHT**) output **analog** *audio* signals de-embedded from the **SDI** bitstream entering the **SDI IN** Connector (**Item E**, page **12**). See the diagram under **Item K** for pinout information for these connectors.

J Balanced Analog Audio Input Connectors (LEFT and RIGHT)

The **BALANCED AUDIO INPUT** 3-pin female XLR connectors (**LEFT** and **RIGHT**) accept standard **analog** audio signals and are configured for balanced 40K Ω impedance connections. Note that these inputs are relayed to the **CVBS** input selection, and so are automatically selected for *audio* monitoring when the **CVBS** video input source is selected for *video* monitoring (see **Item 4**, page **10**). See the diagram under **Item K** for pinout information for these connectors.

K Selected Balanced Analog Audio Output Connectors (LEFT and RIGHT)

The **SELECTED BALANCED ANALOG AUDIO OUTPUT** 3-pin male XLR connectors are analog outputs of the audio source as selected for the left and right speakers. See the diagram below for pinout information for these connectors.

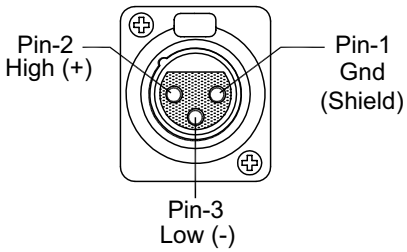

Female XLR Pinout

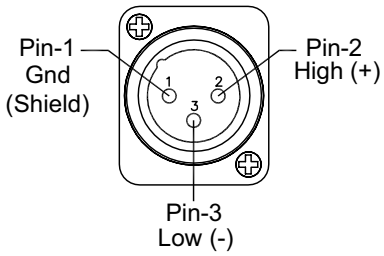

Male XLR Pinout

© 2005 PANORAMAdtv ALL rights reserved

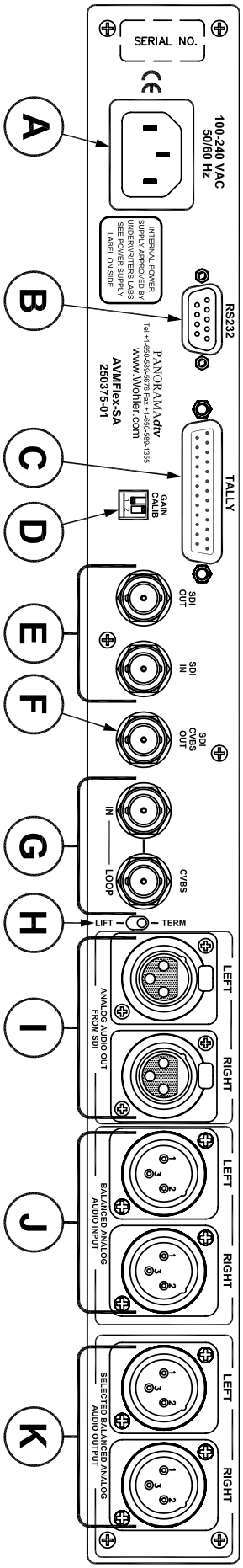

Figure-2c: Rear Panel Features

© 2005 PANORAMAdtv ALL rights reserved

VPOD5W On-Screen Display Controls (AVMFlex-SA/5W2 Only)

Display controls for the **5.8" VPOD** (**VPOD5W**) are set via the three buttons on the VPOD front panel (See **Item 6**, page **10**). Parameters are manipulated as described below:

BRIGHTNESS

Press the **UP** and **DOWN** buttons directly to increase and decrease the LCD display **BRIGHTNESS**. The image below will be displayed on-screen while adjusting to indicate the level.

COLOR / CONTRAST / TINT

1) Press the **MENU** button to access the **Main Menu** onscreen.
2) Press the **UP** and **DOWN** buttons to *scroll* through the options.
3) Press the **MENU** button to *select* the chosen parameter for adjustment.
4) Press the **UP** and **DOWN** buttons to *adjust* the level.
5) Press the **MENU** button to *return* to the **Main Menu**.
6) To *exit* the menu, use the **UP** and **DOWN** buttons to select **EXIT** and then press **MENU.**

NOTE: The **TINT** parameter is applicable ONLY when monitoring **NTSC** video source signals.

The onscreen menu and pamameters for **COLOR**, **CONTRAST**, and **TINT** controls are shown below:

COLOR
Adjustment:

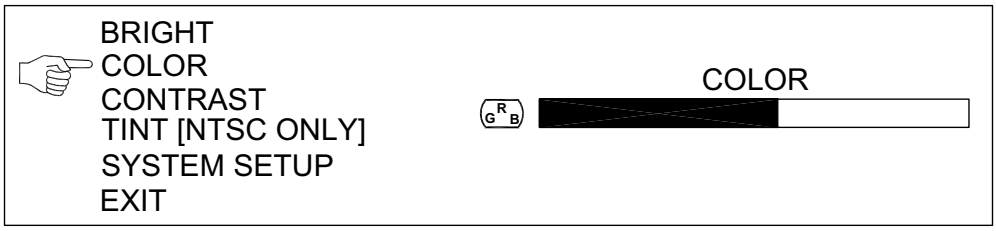

CONTRAST
Adjustment:

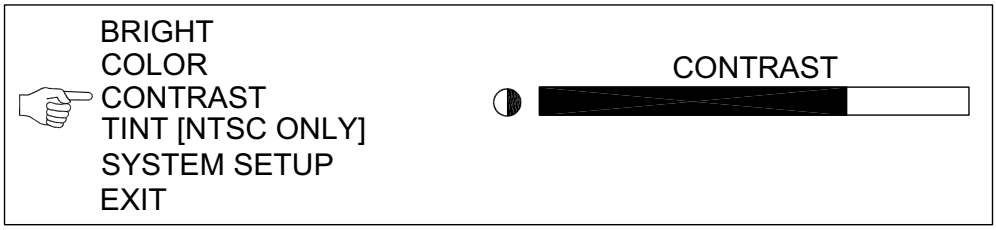

TINT
Adjustment:

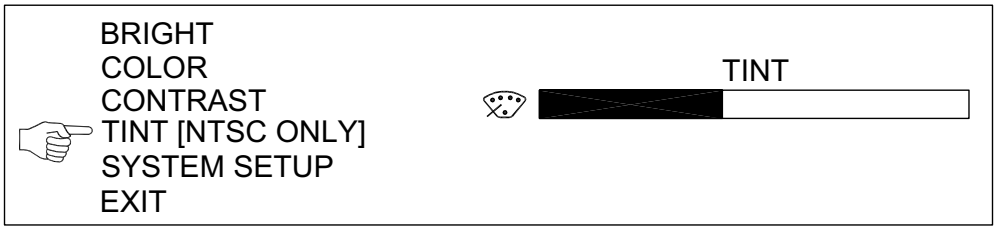

(Continued)

© 2005 PANORAMAdtv ALL rights reserved

VPOD5W On-Screen Display Controls (AVMFlex-SA/5W Only)

(Continued)

SYSTEM SETUP

To enter the **System Setup** submenu, choose **SYSTEM SETUP** in the **Main Menu**, and press the **MENU** button.

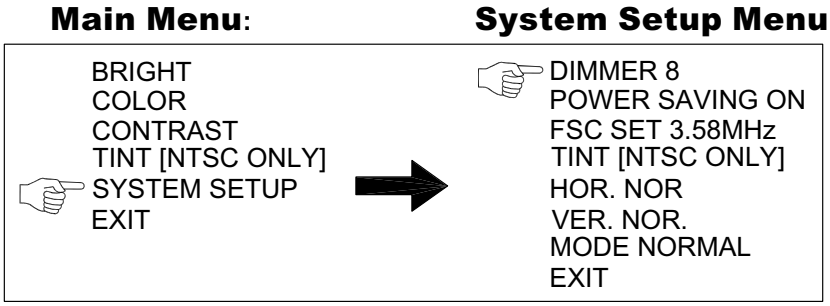

Use the **UP** and **DOWN** buttons to select **System Setup** option as shown below.

DIMMER (1-8)

1) Press **MENU** button to select **DIMMER** option.
2) Press **Up** and **DOWN** buttons to select **Dimmer** level from **0** to **8**.
3) Press **MENU** to activate selection.

This adjusts the LCD backlight brightness level.

POWER SAVING ON

1) Press **MENU** button to select **POWER SAVING ON** option.
2) Press **Up** and **DOWN** buttons to select **POWER SAVING ON** or **POWER SAVING OFF.**
3) Press **MENU** to activate selection.

When the display is set up with **Power Saving Mode ON**, power will automatically turn off after 6 seconds if there is no video signal entering the display. Power will automatically turn as soon as a video signal is detected.

FSC SET 3.5MHz

1) Press **MENU** button to select **FSC SET 3.5MHz** (**Frequency Subcarrier**) option.
2) Press **Up** and **DOWN** buttons to select **FSC SET 3.58MHz** or **FSC SET 4.43MHz.**
3) Press **MENU** to activate selection.

This option will force the **Frequency Subcarrier** of the display at **3.58MHz** or **4.43 MHz**.

HOR. NOR.

1) Press **MENU** button to select **HOR. NOR.** (**Horizontal Reverse Image**) option.
2) Press **Up** and **DOWN** buttons to reverse the image *horizontally*.
3) Press **MENU** to activate selection.

VER. NOR.

1) Press **MENU** button to select **VER. NOR.** (**Vertical Reverse Image**) option.
2) Press **Up** and **DOWN** buttons to reverse the image *vertically*.
3) Press **MENU** to activate selection.

MODE NORMAL

1) Press **MENU** button to select **MODE NORMAL** option.
2) Press **Up** and **DOWN** buttons to select NORMAL, ZOOM1, or FULL.
3) Press **MENU** to activate selection.

NORMAL mode will display images in original aspect ratio of source (example: 4:3 ratio displayed undistorted in 16:9 screen with blank space on either side). **ZOOM1** mode zooms into center area of display. **FULL** mode forces aspect ratio of source to conform to 16:9 aspect ratio (example: 4:3 ratio displayed in 16:9 screen stretched [distorted] to fill entire display).

EXIT

Press **MENU** button to select **EXIT** option, press **MENU** button again to return to **Main Menu**.

© 2005 PANORAMAdtv ALL rights reserved

Audio Amplifier and Speaker Configuration

General Description

All **AVMFlex-SA Series** modals contain high performance transducers (speakers) driven by three power amplifiers; two amplifier/driver combinations handle midrange and high frequency information in the left and right (stereo) speaker channels, while the third amplifier channel sums the left and right channel information *below* the 500 Hz crossover point in the woofer (bass) speaker(s). Note that the woofer channel is NOT a dedicated **LFE** or **Center** channel.

Speaker Configuration

The 1U rack size **AVMFlex-SA Series** products are configured with two speakers (left and right) to reproduce mid- and high-range audio frequencies (in stereo), but feature *two* woofer speakers to reproduce the summed (combined) *low-range* audio frequencies from the left and right speaker input channels. It should be noted that both woofer speakers, which are wired in series, are driven from *one* woofer speaker channel, and are NOT stereo.

See the simplified diagram below for a block diagram of the **AVMFlex-SA Series** audio amplifier/speaker configuration.

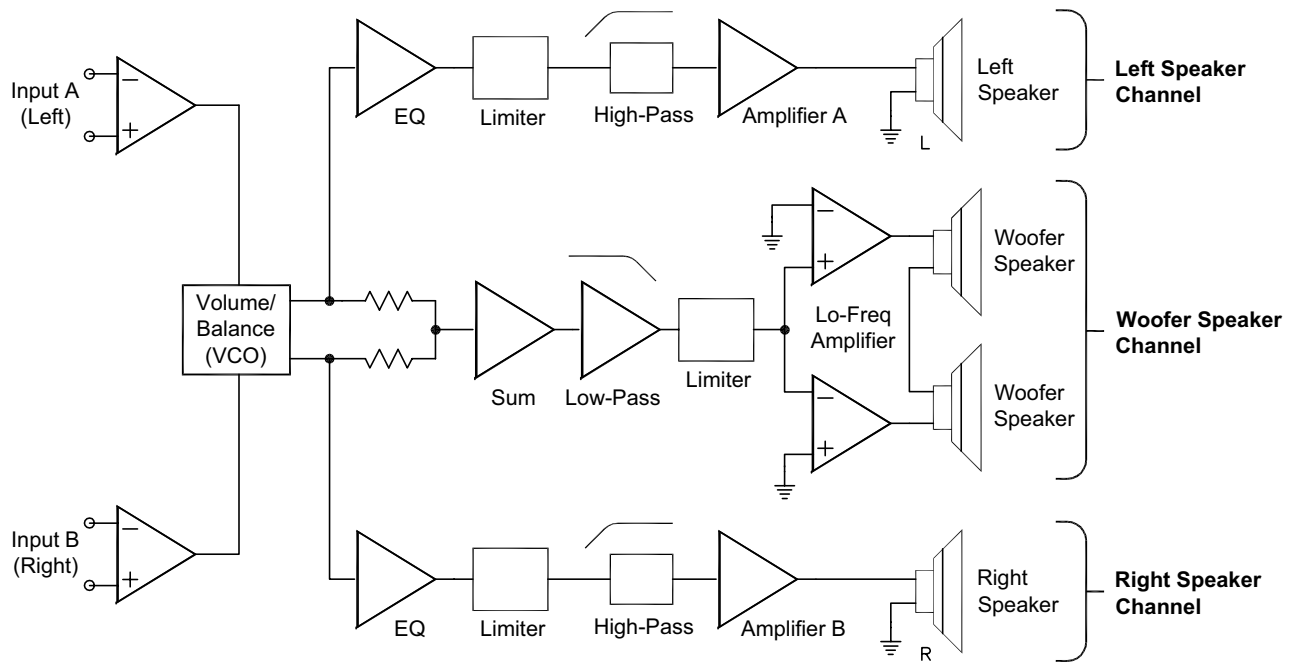

AVMFlex Series (1U) Audio Amplifier and Speaker Block Diagram

Balance Control Characteristics

The balance control attenuates the signal from the source, so that the left and right bass frequencies (summed together and reproduced in the woofer channel) will also respond to the balance control.

Example:
If an audio signal of a voice speaking English is fed to the *left* (A) input and a voice speaking Spanish is fed to the *right* (B) input, then the *left* speaker channel will reproduce the midrange and high-range frequencies of the English speaking voice, the *right* speaker channel will reproduce the midrange and high-range frequencies of the Spanish speaking voice, and the *woofer* speaker channel will reproduce the summed (combined) low-range frequencies of *both* voices.

If the balance control is rotated to the *left* (English), then the Spanish speaking voice in the *right* speaker channel will diminish in volume and the Spanish speaking voice in the *woofer* speaker channel will also diminish.

Note that if the balance control is rotated completely to the left, the volume in both the left speaker channel and woofer speaker channel will increase slightly to maintain overall output level. See the simplified diagram above for placement of the balance control in the audio amplifier circuit.

The converse of the above is true if the balance control is rotated to the right.

© 2005 PANORAMAdtv ALL rights reserved

VPOD Gooseneck Length Adjustment

The **VPOD** LCD display module may be adjusted for two lengths (1.3" and 2.25") by changing the location of two screws on the bottom of the chassis which are lined up with the **VPOD** module. To change the length:

1) Locate the adjustment holes on the bottom of the main chassis that correspond with the **VPOD** module.
2) Remove the two (2) installed screws and set aside for later use.
3) Carefully pull or push the **VPOD** module until the two holes of the internal gooseneck mount line up with the appropriate two holes in the chassis bottom. Ensure that the LCD display screen is not touched or otherwise damaged during this operation.
4) Reinstall the two screws removed in step 2 into the new position.

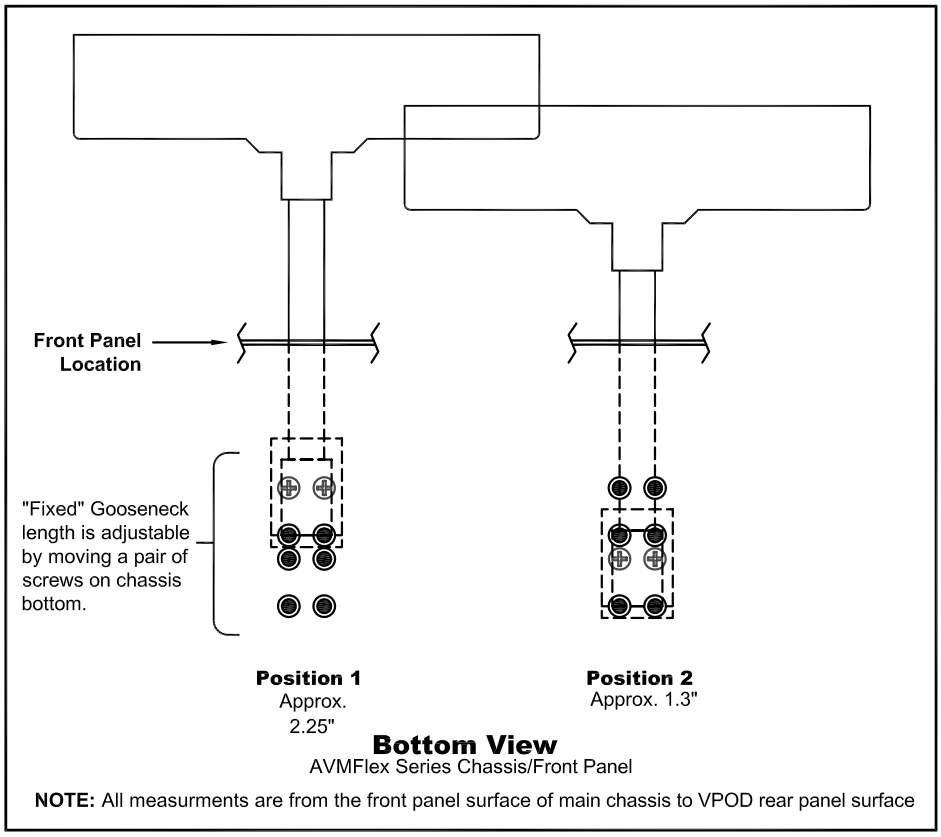

Figure-3d: VPOD Gooseneck Length Adjustment

CAUTION: Do NOT rotate (twist) the VPOD module around the gooseneck axis; the torque may damage the gooseneck and/or internal wiring. Also, avoid touching the LCD video screen itself with the fingers or other objects.

© 2005 PANORAMAdtv ALL rights reserved

(This page left intentionally blank)

© 2005 PANORAMAdtv ALL rights reserved

Section 3

Technical Information

Tally Control Connector Wiring

Level Meter Specifications

Level Meter Settings

AVMFlex-SA Series Interconnect Block Diagram

© 2005 PANORAMAdtv ALL rights reserved

General Technical Observations

General Mechanical Observations

Elimination of cabinet and component sympathetic vibrations (resonances) requires considerable attention to mechanical details. Because of this, and the physical constraints of the speaker's acoustic enclosures, even minor changes to any of the mechanical details of the unit can seriously impair its acoustic performance. This especially applies to the speaker baffles. If mechanical work on the unit is necessary, be sure to make adequate notes to permit accurate reassembly.

Unfortunately, the unusual and wholly proprietary method of magnetic shielding is usually degraded slightly by any disassembly of the unit, except removal of the rear panel. Almost any maintenance or repair will require removal of the cover. If an immediately adjacent video monitor shows magnetic interference after reassembly of the unit, it must be returned to the factory to restore the shielding completely.

General Audio Circuitry Observations

Since a single-sided power supply is used, all amplifier sections are "biased" with a 1/2 supply reference, so all opamp signal terminals on the main board should have a DC level of +12V, +/-0.7V. Signal inputs to the main audio board from any of the input select circuits are via the balanced input stage, in lieu of the XLR analog inputs on the basic unit. Signal feed points for level meters and the phase indicator are immediately after the input stage, and before the volume control section.

The signal pick-off for the headphones is <u>after</u> the volume and balance controls. Speaker muting is controlled by circuitry that senses connection of headphones to the jack.

The power amps are attached to an aluminum heatsink plate (which is also connected to the circuit common for these devices). The heatsink plate forms an operational module separate from the chassis, which allows access to the solder side of the circuit board while power is applied to the circuitry. To avoid thermal shutdown of the power amp(s), they should NOT be operated without their tabs being fastened to the heatsink plate.

Variations in the frequency response of different production runs of drivers has sometimes required minor adjustments in the equalization/ crossover components in individual runs of units. Some of these components may have values slightly different than those indicated in the schematic, which are the nominal ones. If any of the drivers (speakers) are replaced, it may be helpful to change some of these components to achieve maximum flatness of response.

The operating threshold of the woofer limiter is critical to both satisfactory reproduction of musical transients and preventing damage to, or destruction of, the speaker itself. The side speaker output limiter circuits are similarly important, though not as critically adjusted.

The woofer power amps are arranged in a bridge configuration; care must be taken to avoid letting EITHER speaker terminal contact the chassis (common) OR THE GROUNDED LEAD OF ANY TEST EQUIPMENT so as not to short out the power amps. The side speaker outputs are single-ended, so these precautions are not necessary for them.

© 2005 PANORAMAdtv ALL rights reserved

Tally Control Connector Wiring

A front panel dual-color **Tally Indication LED** is associated with each LCD display module. Interface is provided to the LEDs via the **Tally Control Connector** located on the chassis rear panel. The **Tally Indicator LED**s are capable of displaying three colors; RED, GREEN, and AMBER. Illuminating the RED or GREEN LEDs separately will result in that tally color. Illuminate the RED and GREEN LEDs simultaneously to achieve a AMBER tally indication in the LED. For Tally Control Connector pinout functions, see the diagram below.

Three examples of tally connection configurations are shown on the next page. You can operate the **Tally Indication LED**s by numerous methods. The three tutorial examples showing **dry closure**, **positive true logic drive**, and **open collector** activation are illustrated to show basic operation. The LEDs interface with TTL levels. You can design illumination circuits as shown, by using TTL buffers, or by using transistors as switches.

Note that since the **AVMFlex-SA Series** units feature only a single LCD display (and Tally LED), only the first tally channel is utilized in the pinout diagram below and in the wiring examples on the next page.

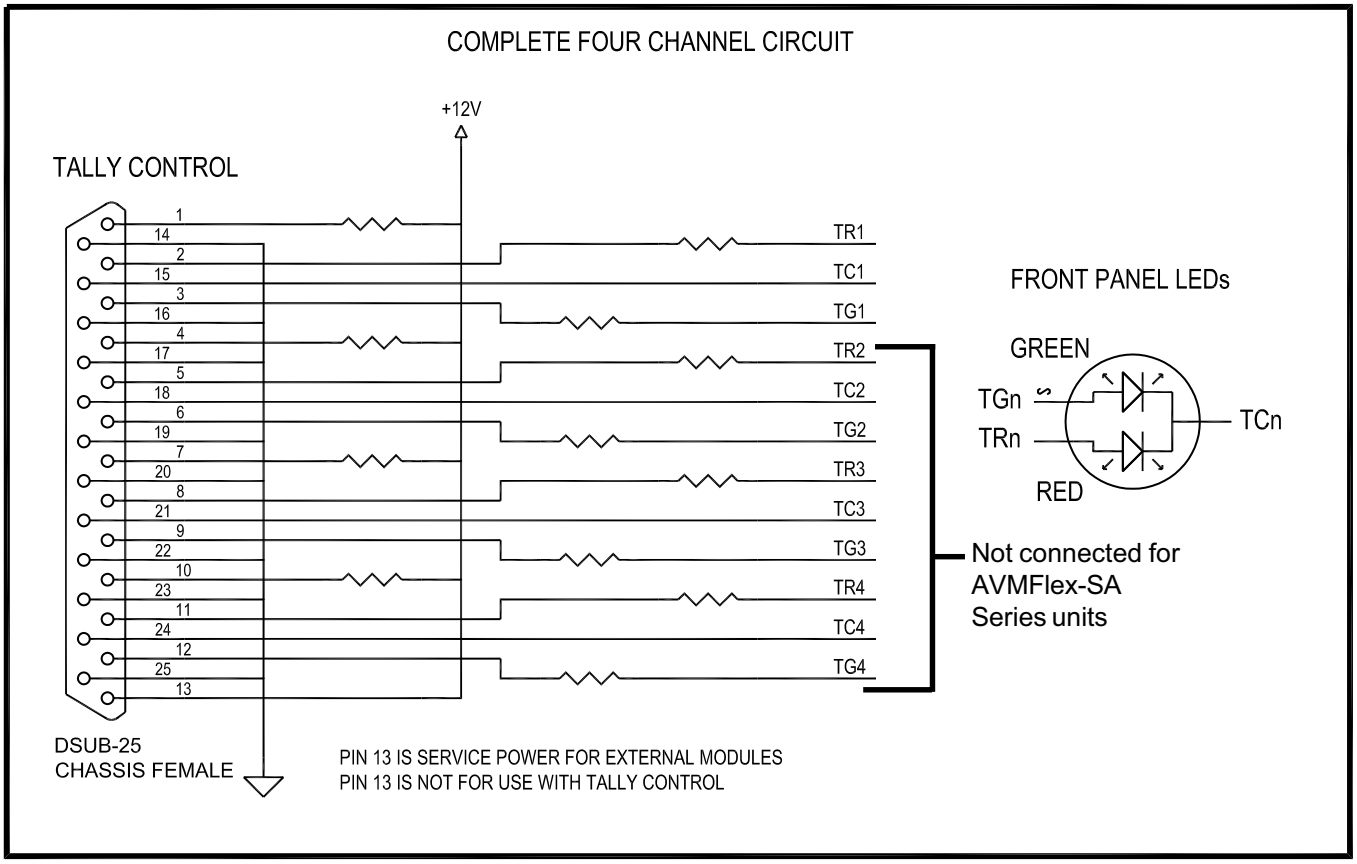

Tally Connector Pin Functions

© 2005 PANORAMAdtv ALL rights reserved

Tally Control Connector Wiring

Note that since the **AVMFlex-SA Series** units feature only a single LCD display (and Tally LED), only the first tally channel is utilized in the wiring examples below.

DRY CLOSURE
USING INTERNAL POWER SOURCE
BOTH LEDS ON IS OK, BOTH = YELLOW

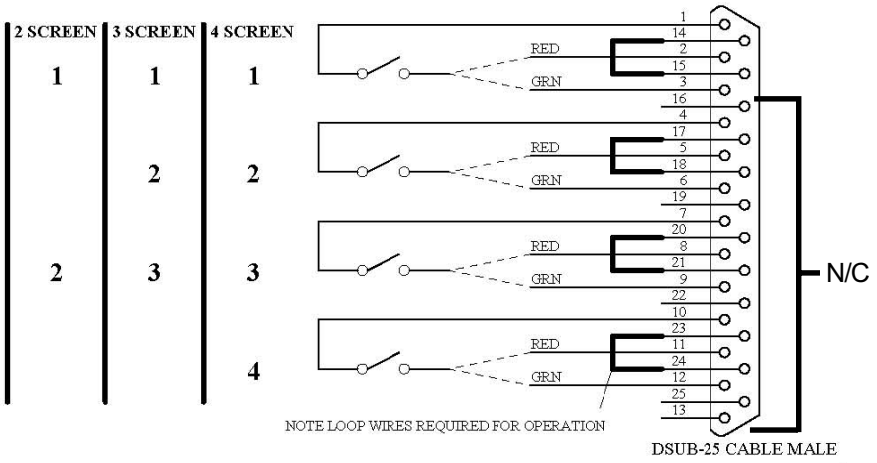

POSITIVE TRUE LOGIC DRIVE
USING EXTERNAL POWER 5 - 12VDC
BOTH LEDS ON IS OK, BOTH = YELLOW

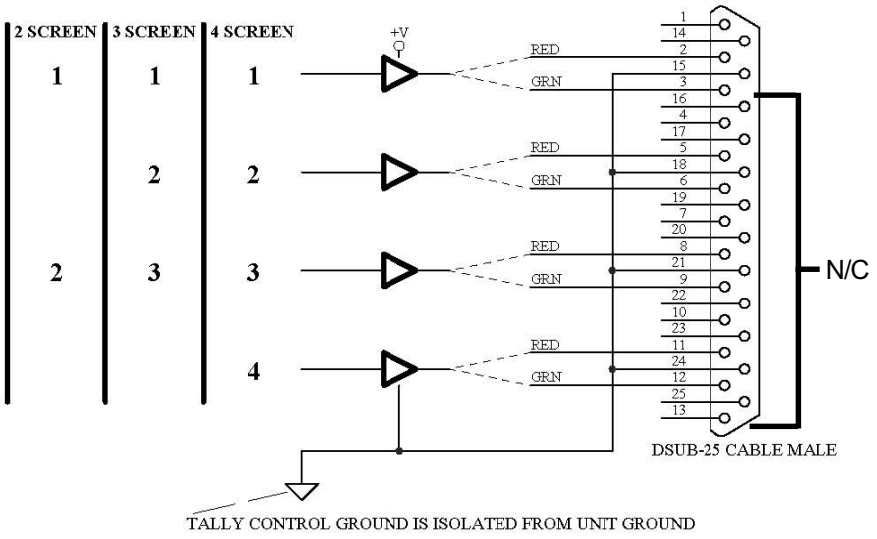

OPEN COLLECTOR
TRANSISTOR ON =LED ON
ONE LED ONLY

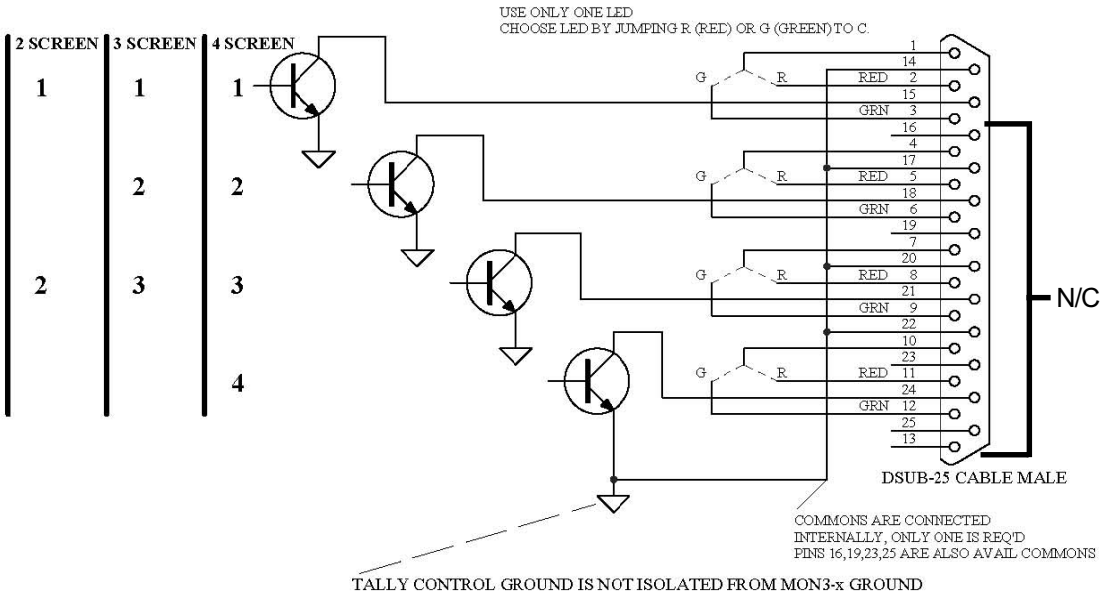

Tally Connection Configuration Examples

© 2005 PANORAMAdtv ALL rights reserved

Level Meter Specifications

Level Calibration:	-6, 0, +4, +8 dBv, Selectable
Frequency Response:	20 Hz to 18 kHz (±0.5 dB)
Level Meter Type:	10-segment LED Bargraph Display
LED Colors:	Tricolor (red, amber, green)
Metering Range:	23 dB
Display Mode (Ballistics):	VU or PPM, Selectable
VU Characteristics:	
Rise Time =	300 millisecond to 99 % of full indication
Decay Time =	300 millisecond
PPM Characteristics:	
Attack Time =	10 milliseconds
Decay Time =	2 seconds, 0 to -20 dB
Bargraph Length:	2.00" (50.8 mm)
LED Segment Size:	0.152" x 0.305" (3.56 x 7.75 mm)
LED Segment Pitch:	0.20" (5.08 mm)
Segment Brightness, (I f = 20 mA):	5.5 mcd
Segment Brightness, Uniformity:	<8% difference between segments
Adjacent Segment "Off" Brightness:	<1% of brightness of active segment
Peak Emission Wavelength:	green: 570 nm red: 630 nm

Level Meter Settings

Level Meter DIP Switch Location

Two DIP switch modules allow the user to set the level meter parameters independently for each of the two bargraph displays. These DIP switches are accessible by removing the top cover of the unit and are located on two PCBs installed at right angles to the front panel where the level meters are installed. The DIP switches face upwards for easy adjustment.

There are four sections (**1**, **2**, **3**, **4**) on each DIP switch module. The first two sections (**1** and **2**) are for setting the **Meter Input Gain Calibration** and the second two sections (**3** and **4**) are for setting the **Bargraph Display Mode**.

Meter Input Gain Calibration Settings

DIP switch sections **1** and **2** set the **Meter Input Gain Calibration**, which determines the level of the input signal that will result in a "0" reading on the meter bargraphs. The factory setting is +4 dBv, but can instead be set for -6 dBv, 0 dBv, or +8 dBv by the user. See the diagram below for settings.

Bargraph Display Modes

DIP switch sections **3** and **4** determine how peak levels are displayed (**Display Mode**) and select either the **PPM mode** or an auto-reset **VU Peak mode** (NOT the PPM value!). The **PPM mode** exhibits an attack time of 10 milliseconds and a decay time of 2 seconds from 0 to -20 dB. The **VU mode** exhibits a 300 millisecond rise to 99% of full indication and a decay of 300 milliseconds. The factory setting is **VU mode**. See the diagram below for settings.

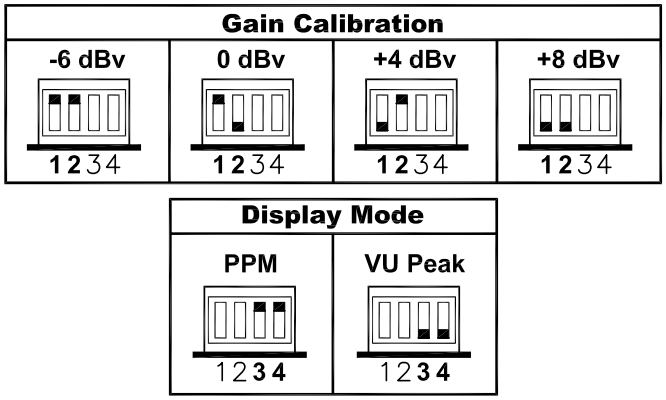

© 2005 PANORAMAdtv ALL rights reserved

AVMFlex-SA Series Interconnect Block Diagram

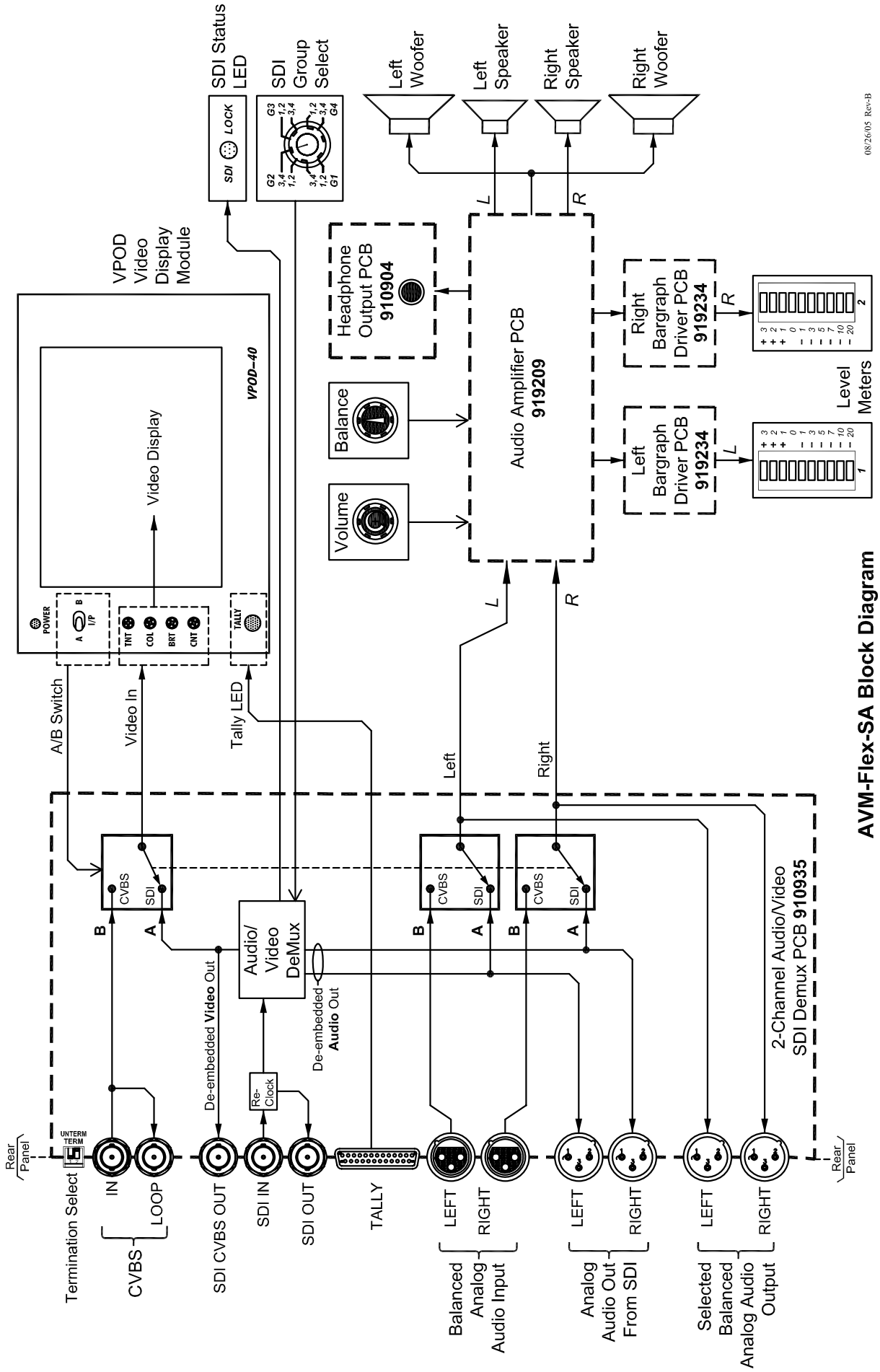

© 2005 PANORAMAdtv ALL rights reserved

Notes:

© 2005 PANORAMAdtv ALL rights reserved

Wohler Technologies, Inc.
31055 Huntwood Avenue
Hayward, CA 94544
Phone: **(510) 870-0810** Fax: **(510) 870-0811**
US Toll-Free: **1-888-596-4537**
www.panoramadtv.com sales@panoramadtv.com

© 2005 PANORAMAdtv ALL rights reserved